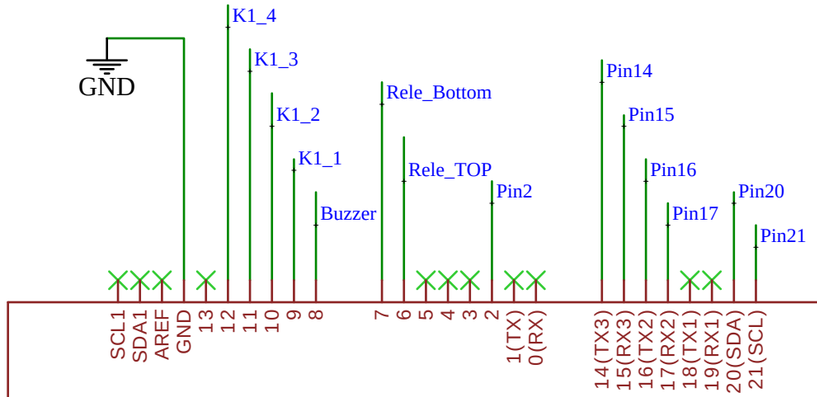

ARDUINO MEGA 2560

PCB1
ARDUINO-MEGA2560_1 COPY

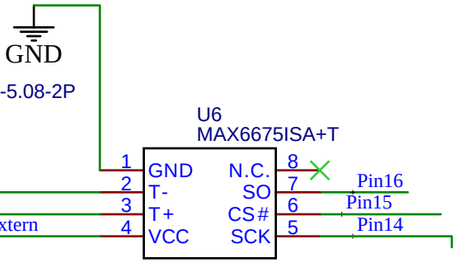

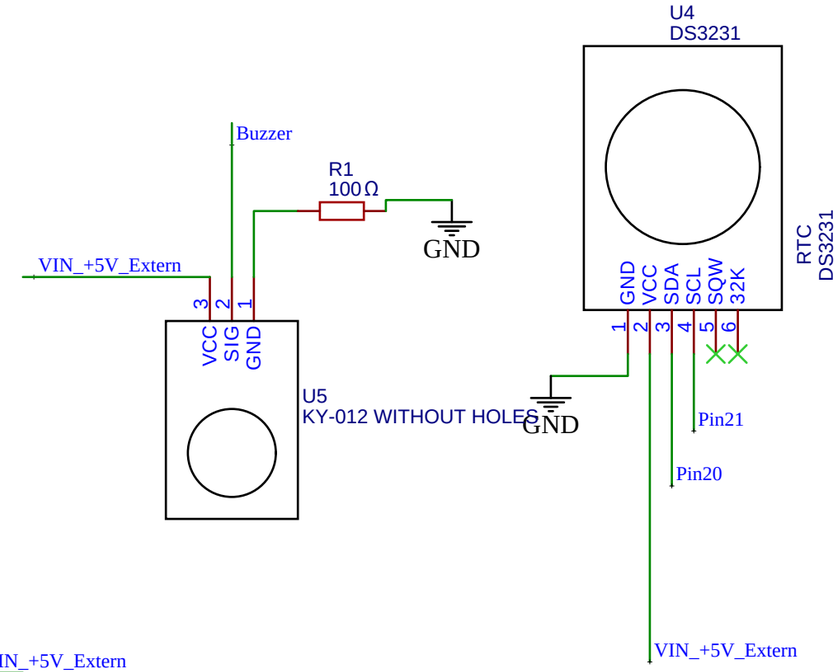

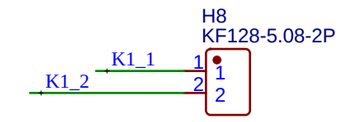

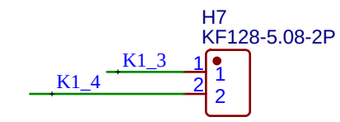

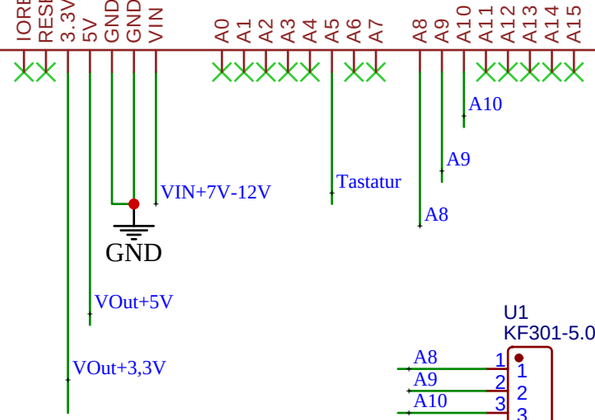

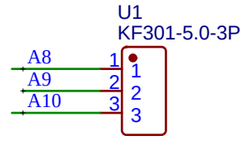

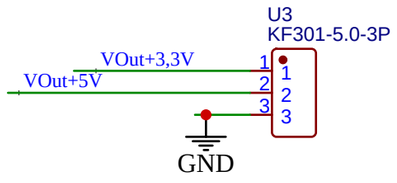

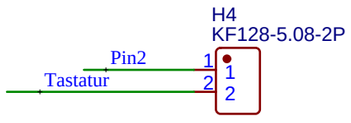

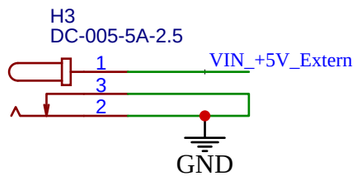

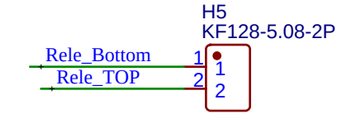

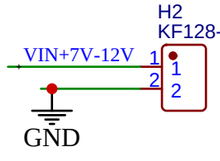

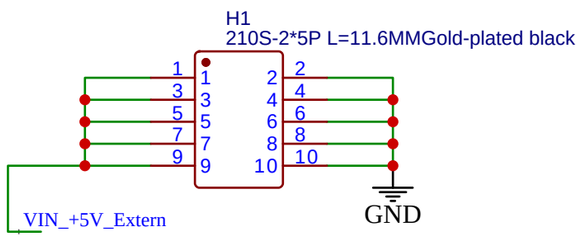

TITLE: Sheet_1		REV: 1.0
	Company: Your Company	Sheet: 1/1
	Date: 2022-07-24 Drawn By: bolvan	